ЧЕБОКСАРСКИЙ ЭЛЕКТРОАППАРАТНЫЙ ЗАВОД

ONE-, TWO- and THREE-POLE CIRCUIT BREAKERS and SWITCHES

ТУ16-526.016-73, ТУ16-526.017-73, ТУ16-526.066-69, ТУ16-526.287-72

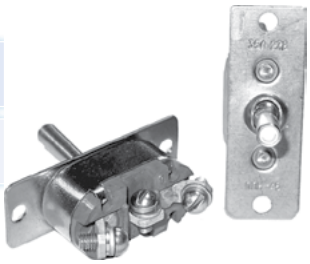

V-45M, V-45M-K, VN-45M, VN- 45M-K, PP-45M, PP-45M-K, PN-45M-2, PPN-45, PPN-45-K

2V-45, 2V-45-K, 2VN-45, 2PP- 45, 2PP-45-K, 2PPN-45, 2PPN-45-K, 2PN-20, 2PNP-47

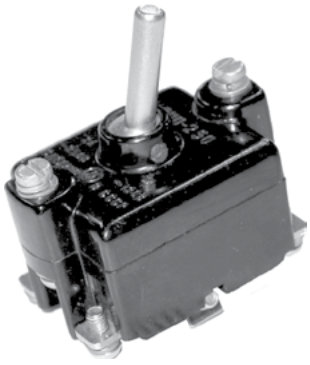

2PP-250, 2PP-250-K

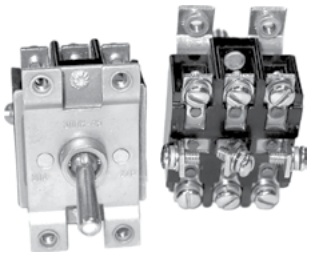

3PPN-45, 3PPN-45P, 3PPN- 45-K

The devices are intended for operation in fixed and mobile installations. They are intended for switching of DC circuits at voltage up to 30 V, 2PP-250 switch is used for switching of AC circuits in enclosed installations. They can be used as breakers and switches in a variety of applications ranging from motor vehicles and tractors to railway and river transport.

Technical Data

Rated voltage, V 27*
Mounting ..... with screws
* – for 2PP-250, 2PP-250-K – up to 120 V and to 250 V AC

Type	Rated current , A	Name	CO cycles	Weight, g
V-45M V-45M-K	35	One-pole switch	12500	32
VN-45M VN-45M-K	35	One-pole momentary switch	10000	35
2V-45 2V-45-K	20	Two-pole switch	12500	80
2VN-45	20	Two-pole momentary switch	12500	80
PP-45M PP-45M-K	35	One-pole toggle switch	12500	38
PN-45M-2	35	One-pole momentary switch with neutral position	20000	38
PPN-45 PPN-45-K	35	One-pole toggle switch with neutral position	12500	38
2PPN-45 2PPN-45-K	20	Two-pole toggle switch with neutral position	12500	85
2PP-45 2PP-45-K	20	Two-pole toggle switch	12500	85
2PN-20	20	Two-pole momentary switch with neutral position	12500	85
2PNP-47	20	Two-pole momentary switch with NC contacts	12500	85
3PPN-45 3PPN-45P 3PPN-45-K	20	Three-pole toggle switch	10000	90
2PP-250 2PP-250-K	2(up to 250V) 5(up to 120V)	Two-pole toggle switch	10000	75

Schematic Diagrams

V-45M, V-45M-K, VN-45M, VN-45M-K	PP-45M, PP-45M-K	PPN-45, PPN-45-K, PN-45M-2
2V-45, 2V-45-K, 2VN-45M, 2VN-45M-K	**2PNP-47**	**2PN-20, 2PPN-45, 2PPN-45-K**
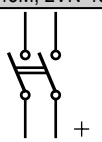	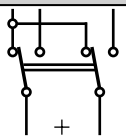	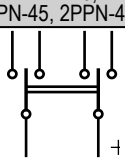
2PP-45, 2PP-45-K, 2PP-250, 2PP-250-K	**3PPN-45, 3PPN-45-K, 3PPN-45P**	
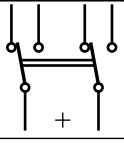	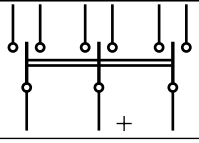	

Overall and Mounting Dimensions

V-45M, V-45M-K, VN-45M, VN-45M-K

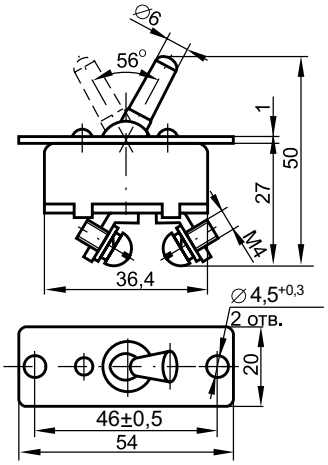

PP-45M, PP-45M-K

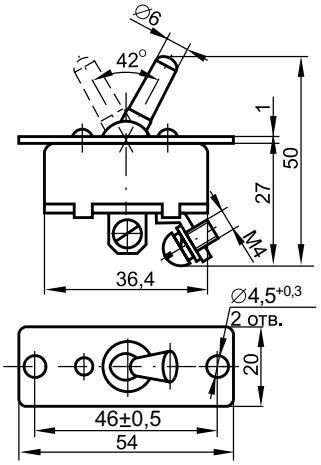

PPN-45, PPN-45-K

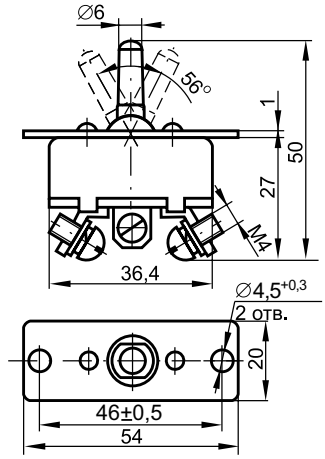

2V-45, 2V-45-K, 2VN-45

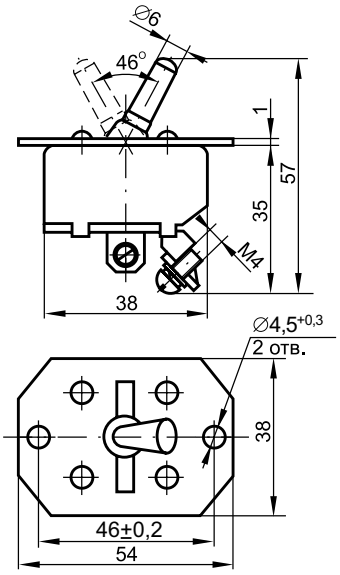

2PP-45, 2PP-45-K, 2PNP-47

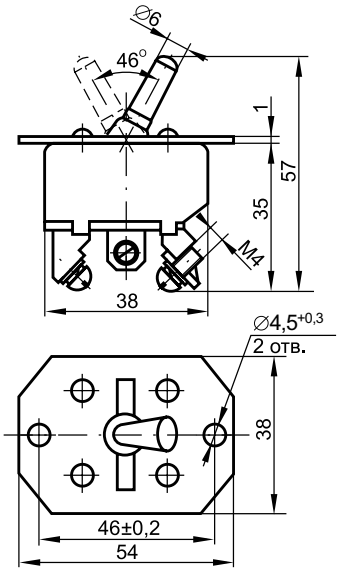

2PN-20, 2PPN-45, 2PPN-45-K

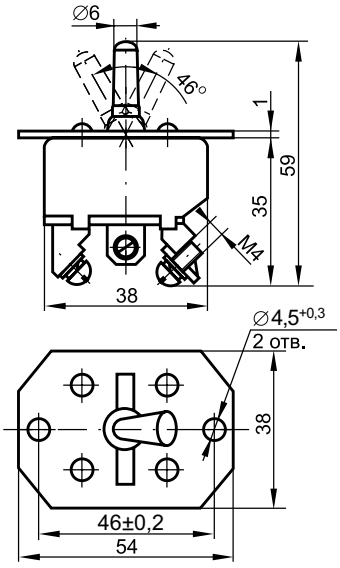

PN-45M-2

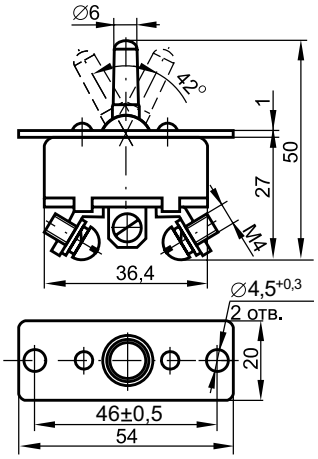

2PP-250, 2PP-250-K

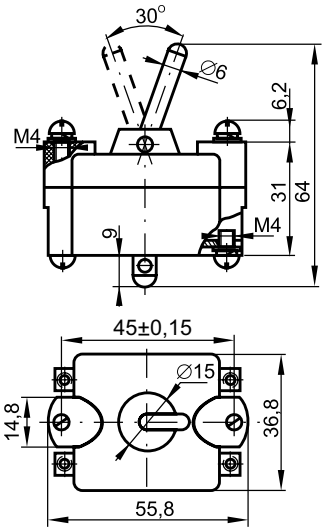

3PPN-45, 3PPN-45-K, 3PPN-45P

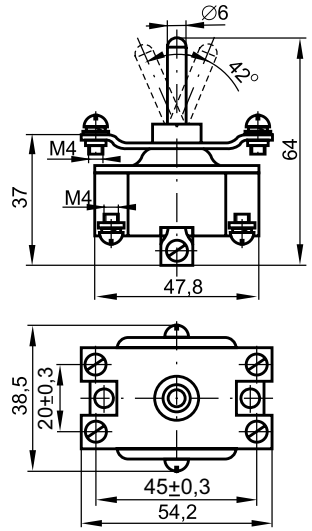

Адрес ЗАО «ЧЭАЗ» 428000, г. Чебоксары, пр. И.Яковлева, 5
Факс +7 (8352) 62-72-31
Телефоны +7 (8352) 39-59-02, 62-32-45
E-mail cheaz@cheaz.ru
www.CHEAZ.ru